7. Oil Pump

A: REMOVAL

1) Disconnect the ground cable from the battery.
2) Remove the pulley belt cover.
3) Loosen the belt tension securing bolt and generator securing bolt, then remove the power steering pump V-belt.

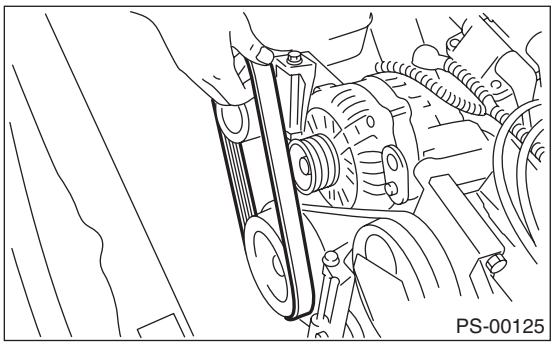

4) Disconnect the connector from power steering pump switch.
5) Disconnect pipe C and suction hose from oil pump.

CAUTION:
• Do not allow fluid to come into contact with the pulley belt.
• To prevent foreign matter from entering the hose and pipe, cover the open ends of them with clean cloth.

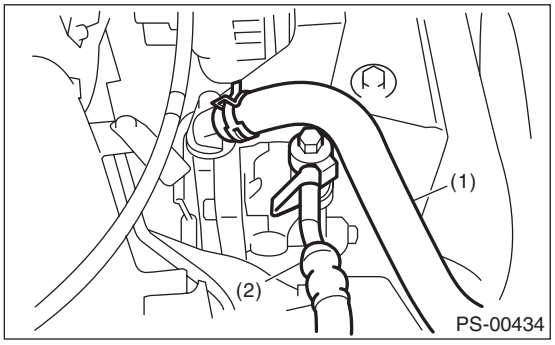

(1) Suction hose
(2) Pipe C

6) Remove the installation bolt of the power steering pump bracket.

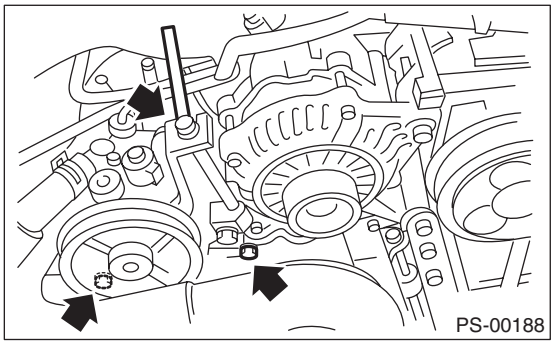

7) Place the oil pump bracket in a vise, and remove the two bolts from the front side of the oil pump.

CAUTION:
When securing the oil pump bracket in a vice, hold the oil pump bracket with the least possible force between two pieces of wood.

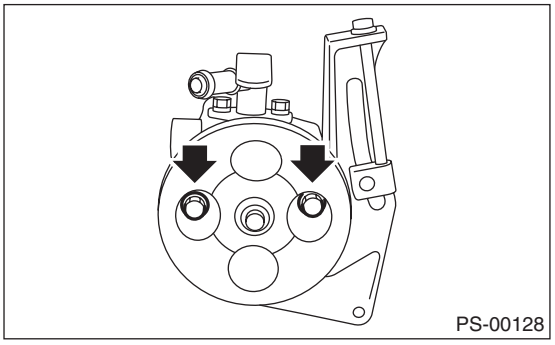

8) Remove the bolt from the rear side of oil pump.
9) Disassemble the oil pump and bracket by inserting a flat tip screwdriver as shown in the figure.

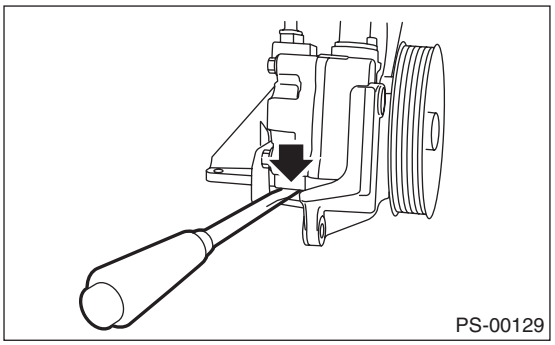

B: INSTALLATION

1) Install the oil pump to bracket.
   (1) Place the oil pump bracket in a vise. Tighten the bushing using a 12.7 mm (1/2″) type, 14 and 21 mm box wrench until it is in contact with the oil pump mounting surface.

CAUTION:
When securing the oil pump bracket in a vice, hold the oil pump bracket with the least possible force between two pieces of wood.

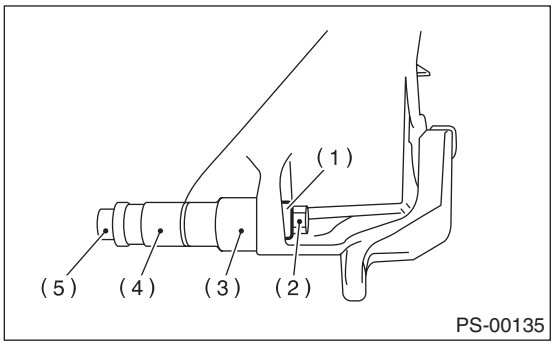

(1) Bushing
(2) Nut
(3) 21 mm
(4) 14 mm
(5) Bolt

(2) Tighten the bolts which hold the oil pump to the bracket.

Tightening torque:
15.7 N·m (1.6 kgf-m, 11.6 ft-lb)

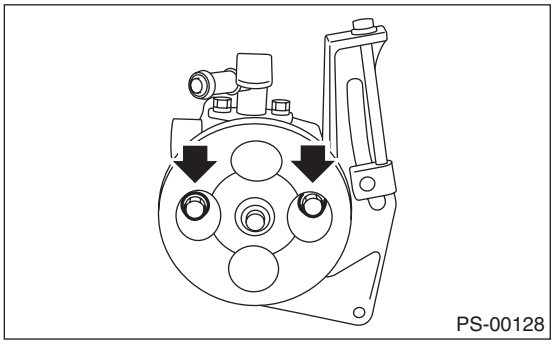

Tightening torque:
37.3 N·m (3.8 kgf-m, 27.5 ft-lb)

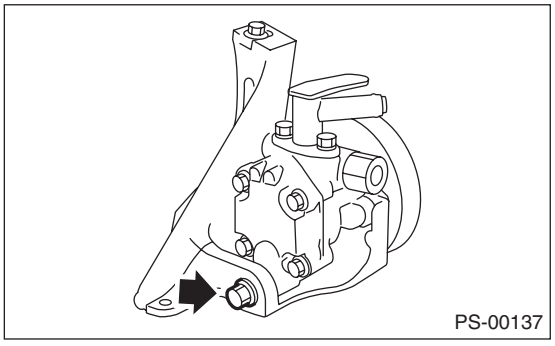

2) Attach the installation bolts of the power steering pump bracket.

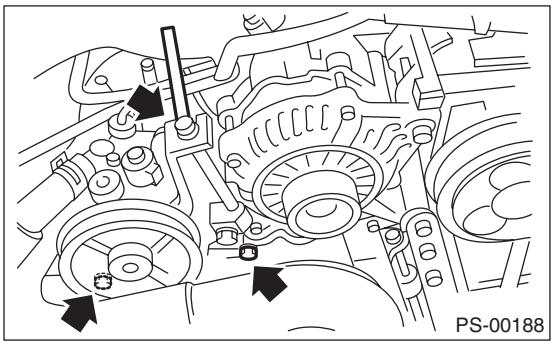

3) Connect the pipe C and the suction hose.

Tightening torque:
Eyebolt
40 N·m (4.1 kgf-m, 29.5 ft-lb)

CAUTION:
Be careful when installing; If the hose is twisted it may come into contact with other parts.

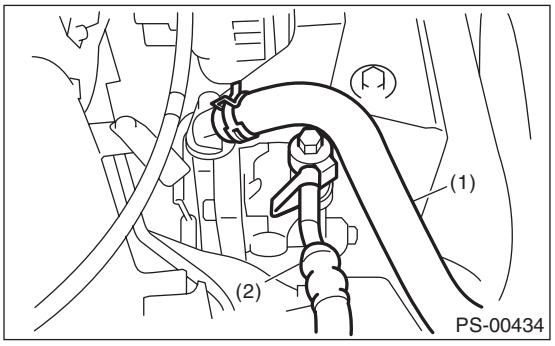

(1) Suction hose
(2) Pipe C

4) Connect the connector to the power steering pump switch.
5) Install the V-belts to the oil pump.
6) Check the tension of the V-belt.
<Ref. to ME(H4SO)-40, INSPECTION, V-belt.>
7) Tighten the belt tension bolt.

Tightening torque:
25 N·m (2.5 kgf-m, 18.1 ft-lb)

8) Install the pulley belt cover.
9) Connect the ground cable to the battery.
10) Fill with the specified power steering fluid.
<Ref. to PS-66, Power Steering Fluid.>

CAUTION:
Never start the engine before feeding the fluid otherwise the vane pump might be seized.

C: INSPECTION

1. BASIC INSPECTION

Perform the following inspection procedures and replace faulty parts.

No.	Part	Inspection	Corrective action
1	Oil pump (Exterior)	(1) Crack, damage or oil leakage	Replace the oil pump with a new part.
		(2) Play of pulley shaft	Measure the radial play and axial play. If any of these exceeds the service limit, replace the oil pump with a new part.
2	Pulley	(1) Damage	Replace with a new part.
		(2) Bend	Measure the V groove deflection. If it exceeds the service limit, replace the pulley with a new part.
3	Oil pump (Interior)	(1) Faulty or seized of vane pump	Check the rotating resistance of pulley. If it exceeds the service limit, replace the oil pump with new part.
		(2) Bend in the shaft or damage to bearing	If the a string is wrapped on the pulley and rotated, and the oil pump emits a noise that is markedly different in tone and loudness from a sound of a new oil pump, replace the oil pump with a new part.
4	O-ring	Cracking or deterioration	Replace with a new part.
5	Bracket	Crack	Replace with a new part.

2. SERVICE LIMIT

Make a measurements as follows. If it exceeds the service limit, replace with a new part.

CAUTION:

- **When securing the oil pump on a vise, hold the oil pump with the least possible force between two pieces of wood.**
- **Do not set the outside of flow control valve or pulley on a vise; otherwise outside or pulley might be deformed. Select properly sized wood pieces.**

1) Play of the pulley shaft

Condition:

P: When applying the force of 9.8 N (1.0 kgf, 2.2 lb)

Service limit:

Play in the radial direction (Direction ⬅ ➡)
0.4 mm (0.016 in) or less

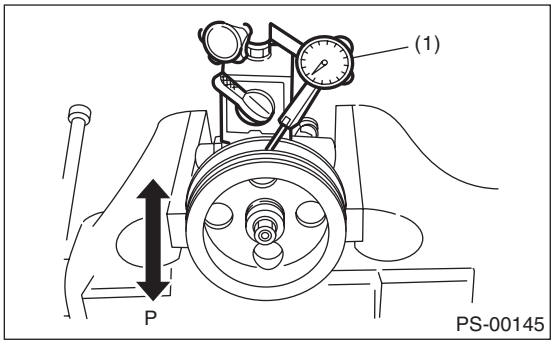

(1) Dial gauge

Axial play (Direction ⇦ ⇨)
0.9 mm (0.035 in) or less

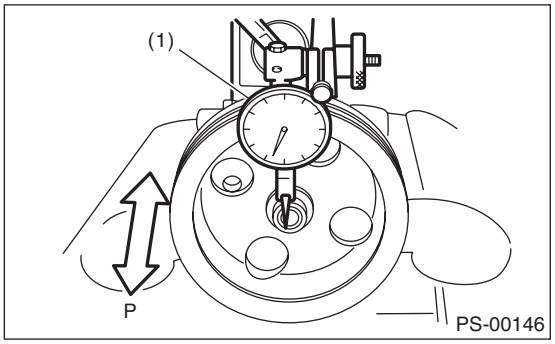

(1) Dial gauge

2) Deflection of the pulley groove

Service limit:

1.0 mm (0.039 in) or less

NOTE:
Read the value for one surface of V groove, and then set a dial on the other face and read the value.

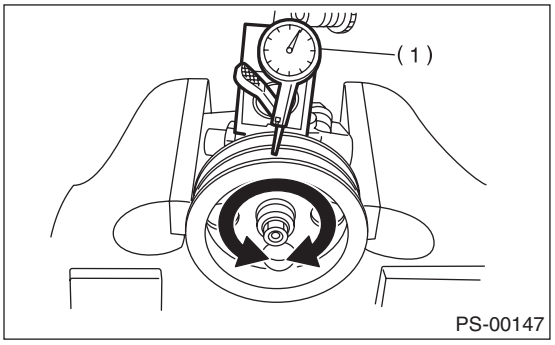

(1) Dial gauge

3) Rotating resistance of pulley

Service limit:

Maximum load: 9.22 N (0.94 kgf, 2.07 lbf) or less

NOTE:

- A rather higher value may be indicated when pulley starts turning.
- Measure the load during rotation to make a judgment.

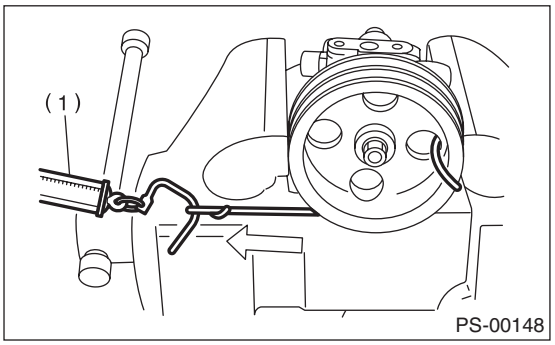

(1) Spring scale

3. HYDRAULIC PRESSURE

NOTE:
- Be sure to complete all items aforementioned in "INSPECTION," prior to measuring hydraulic pressure. Otherwise, pressure can not be measured correctly. <Ref. to PS-67, INSPECTION, General Diagnostic Table.>
- Do not leave the valve of pressure gauge closed or hold the steering wheel at lock for 5 seconds or more in any case, this can damage the oil pump.
- Before attaching a pressure gauge, place cloth at locations where fluid is expected to spill. Wipe off any spilt fluid completely after the measurement.

1) Regular pressure measurement
   (1) Connect the ST1, ST2 and ST3.

ST1 925711000 PRESSURE GAUGE
ST2 34099AC020 ADAPTER HOSE B
ST3 34099AC010 ADAPTER HOSE A

   (2) Remove the air intake duct.
   (3) Disconnect the pipe C from pump.
   (4) Using the gasket (Part No. 34621AC022) and bolt (Part No. 34620AC010), attach the ST2 to pump instead of pipe C.

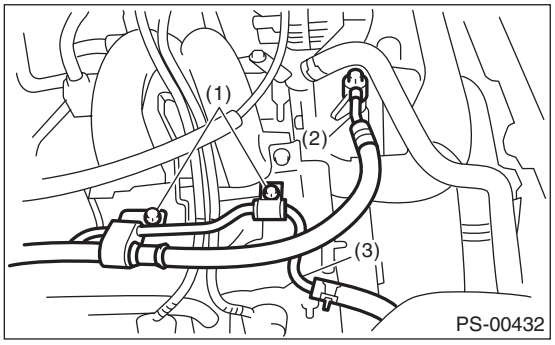

(1) Bolt A
(2) Pipe C
(3) Pipe D

   (5) Attach the ST3 to the end of pipe C which is removed from pump.
   (6) Replenish power steering fluid up to the specified level.
   (7) Open the valve, and start the engine.
   (8) Measure the regular pressure.

ST1 925711000 PRESSURE GAUGE
ST2 34099AC020 ADAPTER HOSE B
ST3 34099AC010 ADAPTER HOSE A

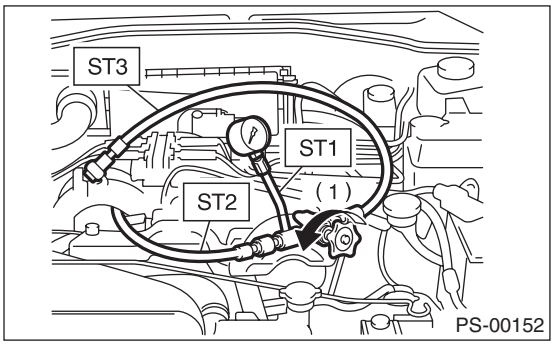

(1) Valve

Service limit:
981 kPa (10 kgf/cm^2, 142 psi) or less

   (9) If it is not within the specification, replace the problem part for the following problems. (Pipe or hose clogged, leaks from fluid line, and mixture of foreign matter in fluid line)

2) Measure the relief pressure.
   (1) Using the STs, measure the relief pressure.
   (2) Close the valve.
   (3) Measure the relief pressure.

ST1 925711000 PRESSURE GAUGE
ST2 34099AC020 ADAPTER HOSE B
ST3 34099AC010 ADAPTER HOSE A

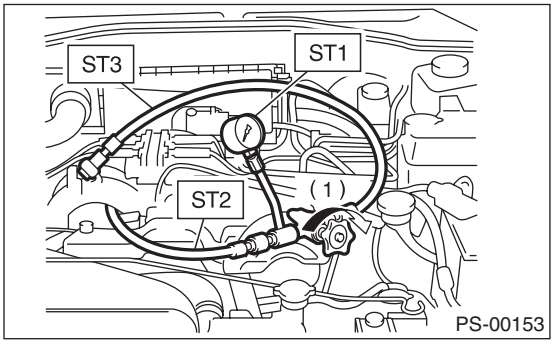

(1) Valve

Service limit:
Non-turbo model:
6,700 — 7,400 kPa
(68 — 75 kgf/cm^2, 972 — 1,073 psi)
Turbo model and STI model:
7,350 — 8,036 kPa
(75 — 82 kgf/cm^2, 1,067 — 1,165 psi)

   (4) If it is not within the specification, replace the oil pump.

3) Measure the working pressure.
   (1) Using the ST, measure the working pressure.
   (2) Open the valve.
   (3) Measure the working pressure of control valve by turning steering wheel from stop to stop.

ST1 925711000 PRESSURE GAUGE
ST2 34099AC020 ADAPTER HOSE B
ST3 34099AC010 ADAPTER HOSE A

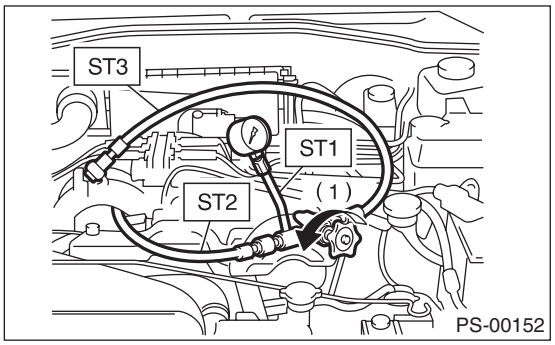

(1) Valve

Service limit:
Non-turbo model:
6,700 — 7,400 kPa
(68 — 75 kgf/cm^2, 972 — 1,073 psi)
Turbo model and STI model:
7,350 — 8,036 kPa
(75 — 82 kgf/cm^2, 1,067 — 1,165 psi)

(4) If it is out of specification, measure the steering effort. <Ref. to PS-70, MEASUREMENT OF STEERING EFFORT, INSPECTION, General Diagnostic Table.> If it is not within specification, replace the control valve itself or control valve and pinion as a single unit, using new parts.